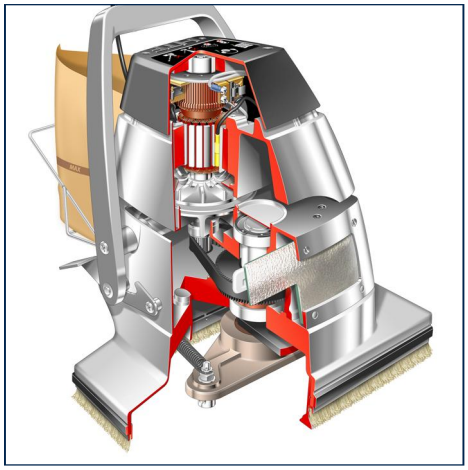

HTF Orbital Floor Sander

The HTF is a powerful, finely balanced orbital floor sander for the sanding and refinishing of all types of wood flooring, including pre-finished parquet, plank and laminate flooring systems. The HTF is also ideal for screen and re-coat work of stained floors and manufactured lacquered floors where the integrity of the stain or finish must be maintained, and for effective sanding of many types of pressure treated decks.

Features

Designed for ease of use and versatility, the HTF is a high performer suitable for a wider range of floors and surfaces than any other orbital floor sander available. Superbly engineered to give a swirl free sanding performance, the HTF glides effortlessly over any surface with finger tip control.

Simple operation and safety are major features of the HTF. A powerful vacuum system picks up the fine dust created in orbital sanding which is collected in a disposable paper dust bag for safe handling and disposal. A biased off switch prevents the sander being accidentally left switched on, while the handle is easily removed for easy, safe transportation. An integral light provides a flood of illumination in front, highlighting the floor surface.

The 400mm x 115mm square form factor provides 0.094kgf/cm2 pressure evenly across the whole of the abrasive pad [1]. Abrasives work at their optimal loading with grits from as coarse as P40. Sanding is efficient and consistent across the whole of the abrasive range.

The HTF's unique abrasive system also allows for the sanding and refinishing of fine parquet and laminate flooring systems. The abrasive pad, used as a backing pad for a range of self adhesive abrasive papers and as a P280 abrasive, features a foam core which prevents the pad from going flat. By retaining its flexibility, the abrasive pad follows the contours of the floor without cutting through high spots to new wood.

For easy abrasive installation, the abrasive pad is simply pressed onto the sanding block and held in place by a hook and loop system. A full range of aluminium oxide self-adhesive abrasive sheets, with high grit density and anti-loading technology, give the HTF an unrivalled performance with fast, effective stock removal.

The HTF has been specifically designed for sanding and refinishing all types of level wood floors in good condition and sanding between coats of varnish where a high standard of final finish is required. The HTF is also the ideal floor sander for sanding and refinishing floating parquet and other thin laminated, veneered or solid wood flooring systems including pre-finished. For floors that require buffing before finishing, a buffing pad can be used in place of the abrasive pad.

Sharing the same motor as the HT7 Disc Floor Sanders the HTF has the power to get the job done, in an easy to operate, flexible design that anyone can use to get the perfect finish on any floor.

[1] Equivalent measurement 15.75" x 4.5" = 1.34psi